BM2A PNEUMATIC DEBURRING TOOL

EXPLODED VIEW

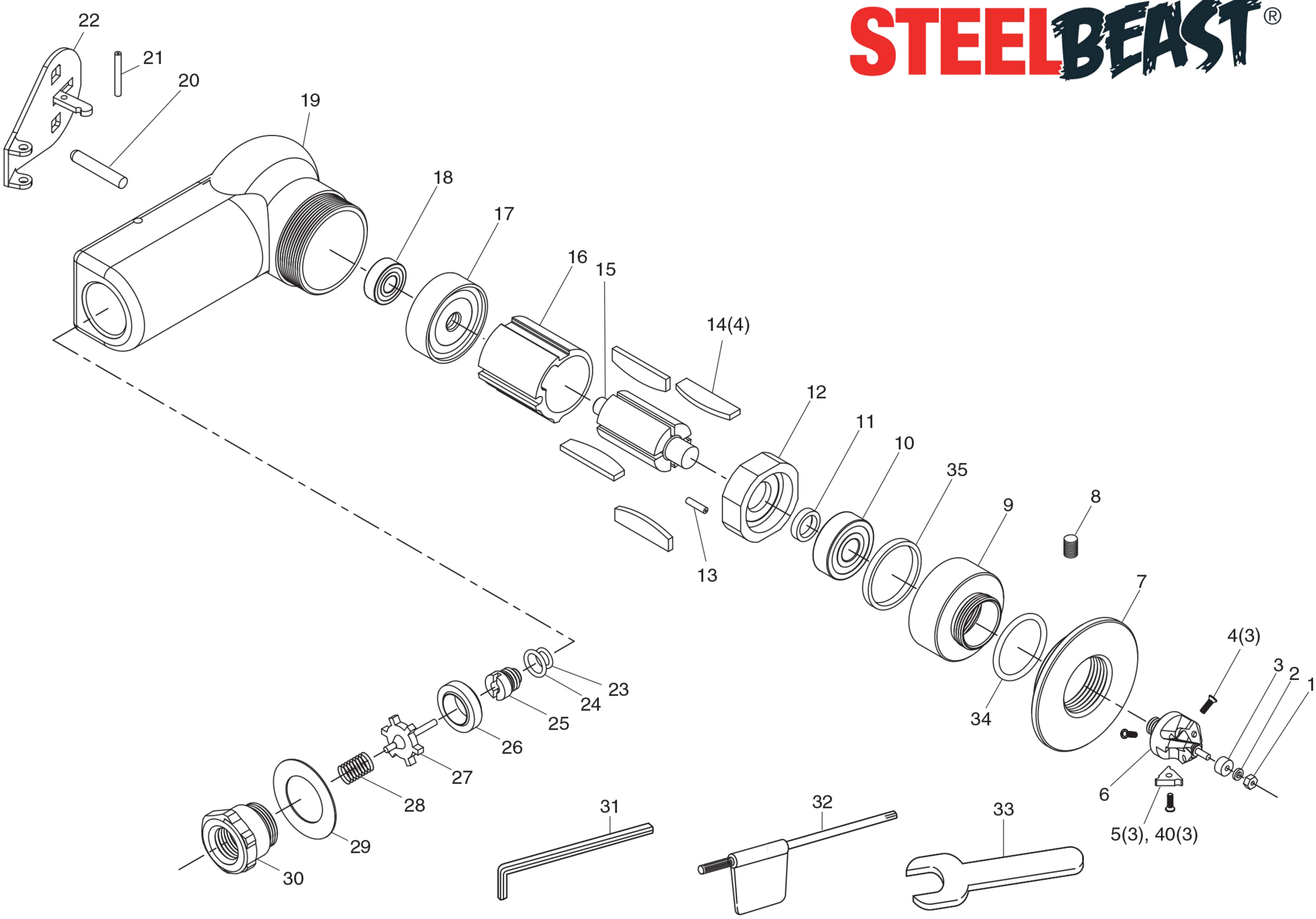

PARTS LIST

Index No.	Parts No.	Description	Qty. Per tool
1	BMB2-01	Hex. Nut	1
2	BMB2-02	Spring Washer	1
3	BMB2-03	Ball Bearing	1
4	BMB2-04	Cutter Bolt	3
5	BMB2-05	Cutter (252-C1.5 1set 10pcs)	3
6	BMB2-06	Cutter Holder	1
7	BMB2-07	Flange	1
8	BMB2-08	Screw	1
9	BMB2-09	Lock Ring	1
10	BMB2-10	Ball Bearing	1
11	BMB2-11	Collar	1
12	BMB2-12	Front Plate	1
13	BMB2-13	Roll Pin	1
14	BMB2-14	Rotor Blade	4
15	BMB2-15	Rotor	1
16	BMB2-16	Cylinder	1
17	BMB2-17	Rear Plate	1
18	BMB2-18	Ball Bearing	1
19	BMB2-19	Body	1
20	BMB2-20	Valve Shaft	1
21	BMB2-21	Roll Pin	1
22	BMB2-22	Safety Lever	1
23	BMB2-23	O-Ring	1
24	BMB2-24	O-Ring	1
25	BMB2-25	Inner Bolt	1
26	BMB2-26	Valve Seat	1
27	BMB2-27	Valve	1
28	BMB2-28	Valve Spring	1
29	BMB2-29	Rear Gasket	1

Index No.	Parts No.	Description	Qty. Per tool
30	BMB2-30	Inlet Bushing	1
31	BMB2-31	Hex. Wrench	1
32	BMB2-32	Flat Torx Wrench	1
33	BMB2-33	Spanner Wrench	1
34	BMB2-34	O-Ring	1
35	BMB2-35	Lock Washer	1
40	BMB2-40	Cutter (252-R1.5 1set 10pcs)	3

The types and specifications may be changed without notice.